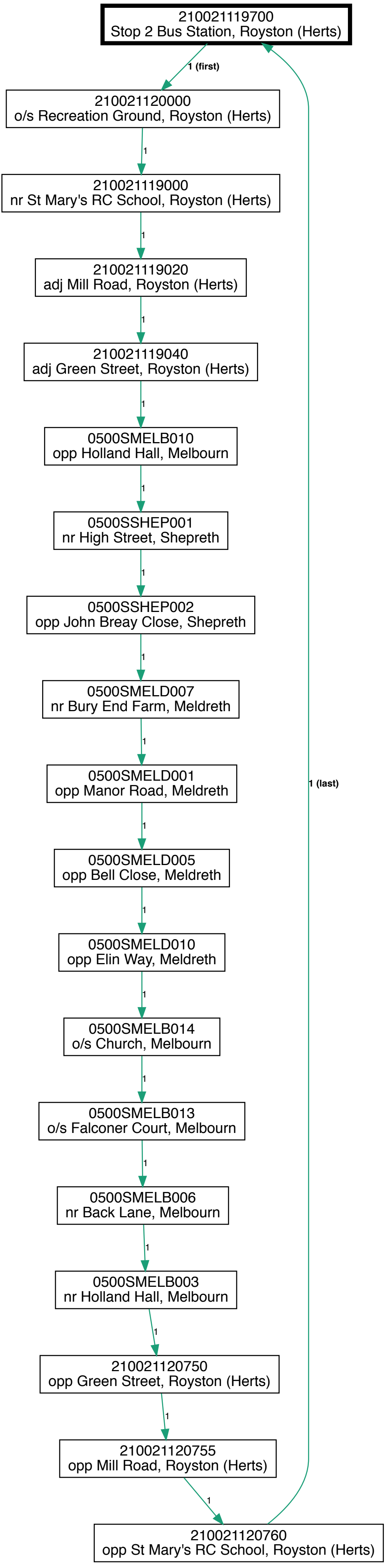

A2B Bus & Coach (Roysto 128 inbound
Royston - Shepreth
ea_20-128-_-y08-1