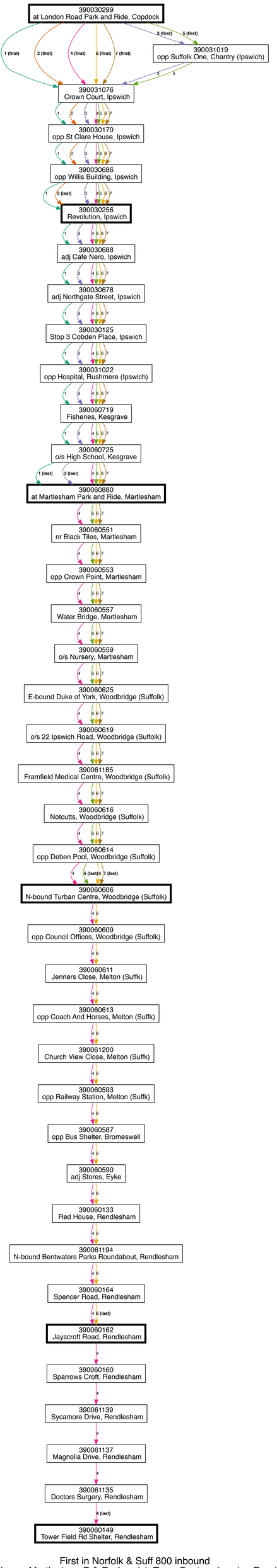

First in Norfolk & Suff 800 inbound
Rendlesham - Martlesham P & R - Ipswich Town Centre - London Road P & R
suf_1-800-_-y08-10